13617

RAMP METER LOOP REPLACEMENT AND YAMHILL A.T.R. PLAN
SE WASHINGTON ST. AT I-205 SB
I-205

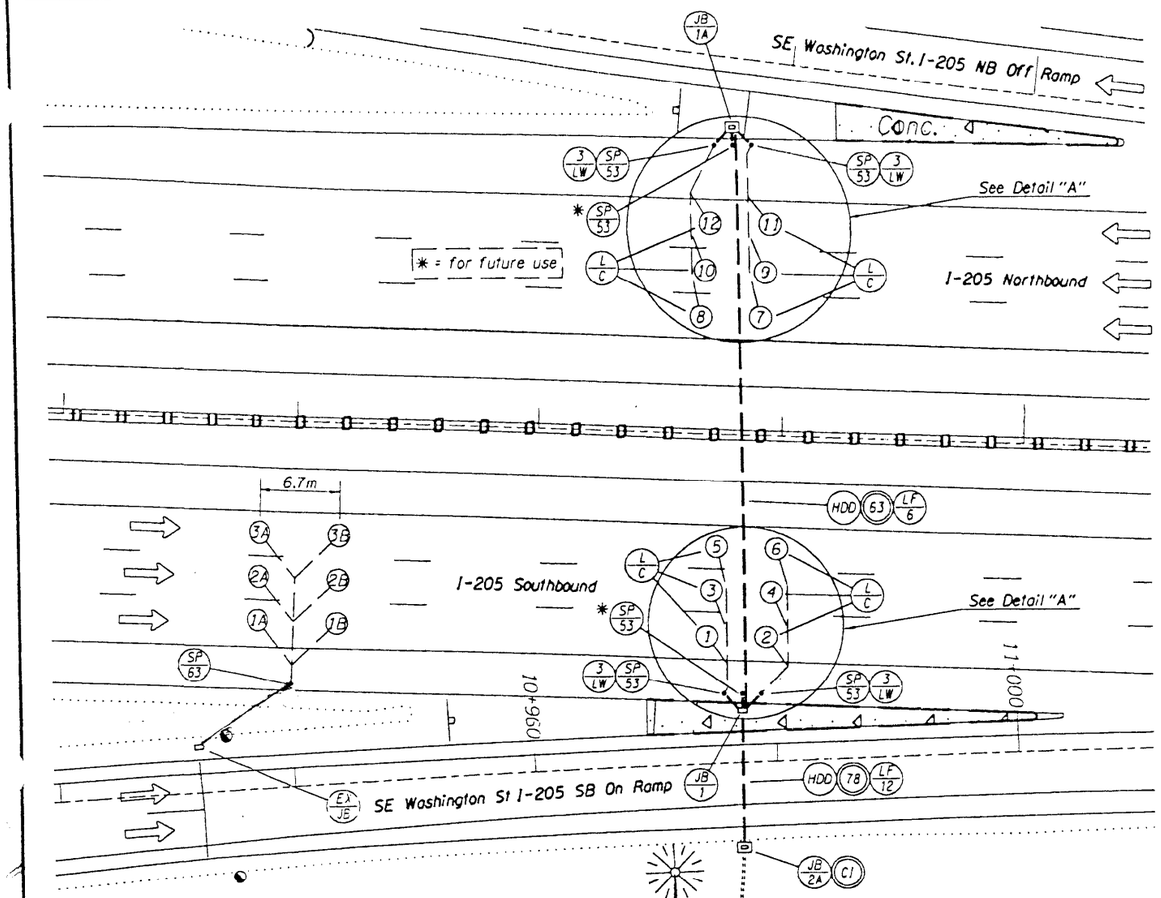

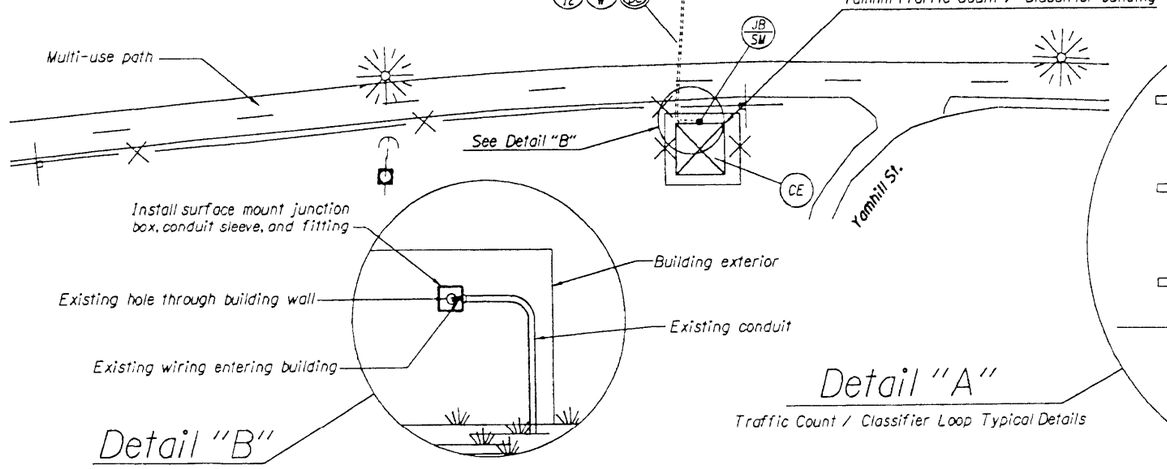

Detail "B"

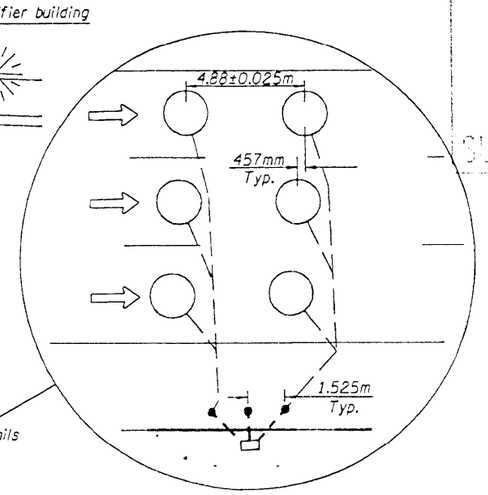

Detail "A"

Traffic Count / Classifier Loop Typical Details

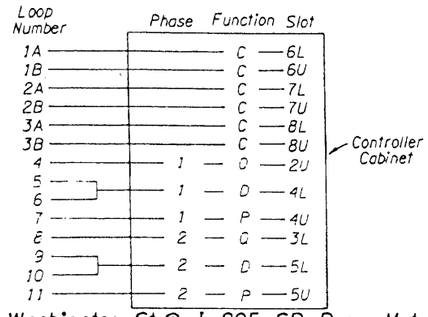

SE Washington St @ I-205 SB Ramp Meter
LOOP DETECTOR WIRING DIAGRAM

C=Count, P=Passage, D= Demand, Q=Queue
See T. M. S. Drwg. No. TM419 and TM433 for loop detector details. Center all loops in travel lanes or as shown on plan.

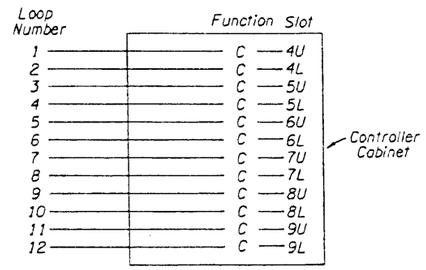

Yamhill A.T.R.
LOOP DETECTOR WIRING DIAGRAM

C=Count
See T. M. S. Drwg. No. TM419 for loop detector details. Center all loops in travel lanes or as shown on plan.

L E G E N D

- EX/JB — Retain and protect existing junction box
- EX/W — Retain and protect existing wiring
- EX/DC — Retain and protect existing detector conduit
- CI — Intercept existing electrical conduit and route into junction box.
- RX/W — Remove existing wiring
- CE — Install State supplied cabinet equipment (from Transportation Data Section) inside Traffic Count / Classifier building
- S — Install (S=size) mm electrical conduit
- HDD — Install conduit by horizontal directional drilling, open trench not allowed
- JB/1 — Install 440 mm x 265 mm x 305 mm (min. dimension) precast concrete junction box
- JB/1A — Install 440 mm x 265 mm x 305 mm (min. dimension) precast concrete junction box with concrete apron
- JB/2A — Install 560 mm x 305 mm x 305 mm (min. dimension) precast concrete junction box with concrete apron
- JB/SM — Install 305 mm x 305 mm x 152 mm (min. dimension) surface mount junction box (Carlon E989R-UPC or approved equal).
- L/C — Install 1.8 m square or round vehicle count loop
- LF/N — Install (N=number of cables) loop feeder cables
- N/LW — Install (N=number) pair of loop wires
- SP/S — Install 150 mm max. sand pocket block-out with (S=size) mm conduit to junction box

"AS CONSTRUCTED"
Date 4-30-07 | Project Mngr

General Notes:

1. Information on this drawing compiled from T.M.S. Drwg. 11552.
2. Field verify all equipment locations before construction.
3. Splice new ramp meter loops to existing loop feeder cables.
4. Coordinate installation of cabinet equipment inside Traffic Count building with Transportation Data Section, Henry Salvatori, 503-986-6602.

AS BUILT
AUG 16 2006
SUNDAY WILLIAMS

"UTILITIES NOT SHOWN"
Contractor to contact utility companies for field locations.

REGISTERED PROFESSIONAL ENGINEER 13,103
David W. Greenberg
OREGON JULY 26, 1985
DAVID W. GREENBERG
Expires June 30, 2005

OREGON DEPARTMENT OF TRANSPORTATION
TRAFFIC MANAGEMENT SECTION

TRAFFIC SIGNAL INSTALLATION
I-205: COLUMBIA R. BR. - WILLAMETTE R. BR. (UNIT 2) SEC.
EAST PORTLAND FREEWAY
MULTNOMAH & CLACKAMAS COUNTIES

DESIGNED BY: D. Harper
CHECKED BY: T. Jenkins
DRAWN BY: D. Harper
FC: 064-20.57

T.M.S. DWG. NO. 13617

1:500 - 3